SolidWorks 2000 CreoScitex Training Level 1

CreoScitex™

Table of Contents

SolidWorks 2000 CreoScitex Training

Level 1

Audience: Casual SolidWorks users.

The Level 1 training is seen as the first step for a CreoScitex designer, detailer or buyer to gain competency in SolidWorks.

Prerequisites:

Completion of the SolidWorks tutorials. A desire to become proficient in SolidWorks.

Course Objectives:

By the end of the Level 1 two day course, the student will be able to:

- Look for basic 3D shapes for part features.
- Select the correct (top) work plane.
- Sketch a base feature.
- Fully Constrain a sketch.
- Check a sketch for proper constraints.
- Use a Boss Extrude
- Use Boss Cut
- Work with Views
- View/Orbit the part.
- Use Fillets, Chamfers and Holes.
- Understand and use CreoScitex Part Naming conventions.
- Use Text and Dimensions.
- Understand and use Max-Min settings for dimensioning arc or circular features.
- Open, Edit, savecopy and saveas a part file.
- Create a “stable” constrained part.
- Use Pallet Parts and Features
- Create a Revolved part.
- Use the Hole Wizard.
- Understand the importance of “Design Intent”.
- Use symmetry for mirrored features:
    - in a sketch, feature, part
- Understand the appropriate use of color for parts (and sometimes faces).
- Drag and drop a part or subassembly into an assembly.
- Work with fixed and floating parts.
- Create an assembly of mated parts.
- Design a new part in an assembly (in context design).
- Export, break and repair in context parts.
- Check part assemblies for interference
- Use the measure tool.
- Use the scan evaluation tool to find relationships
- Inserting Model Items into Drawings

Looking for basic 3D Shapes

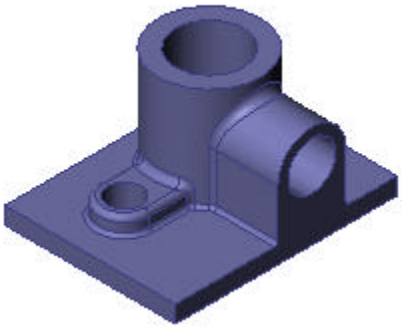

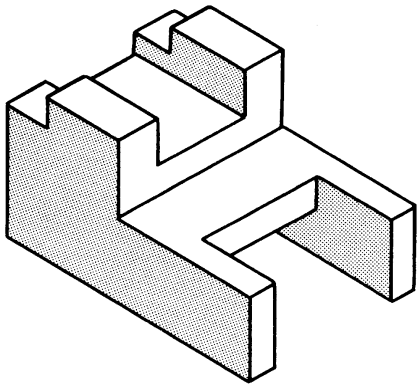

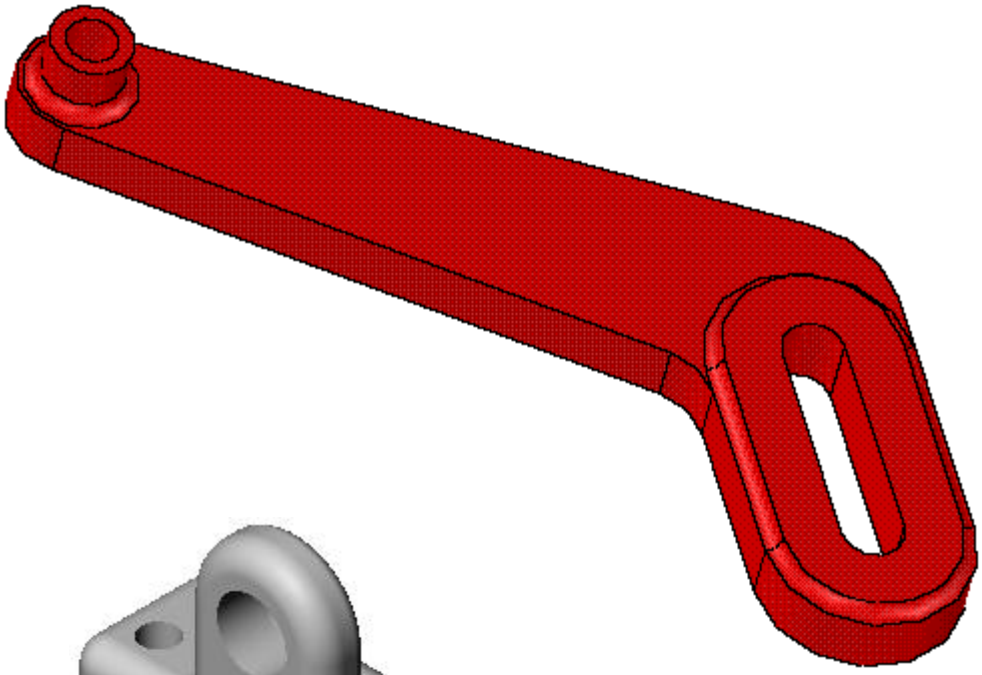

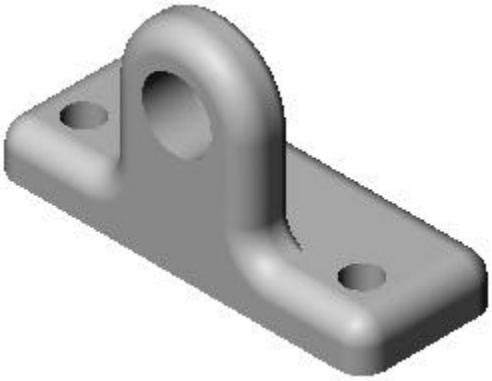

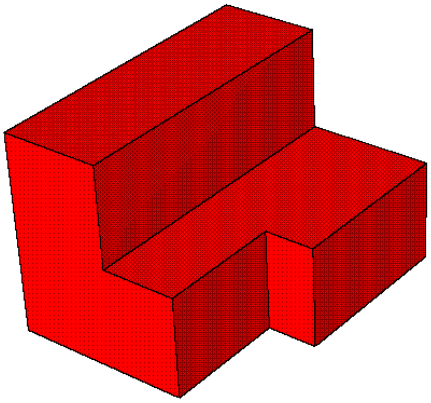

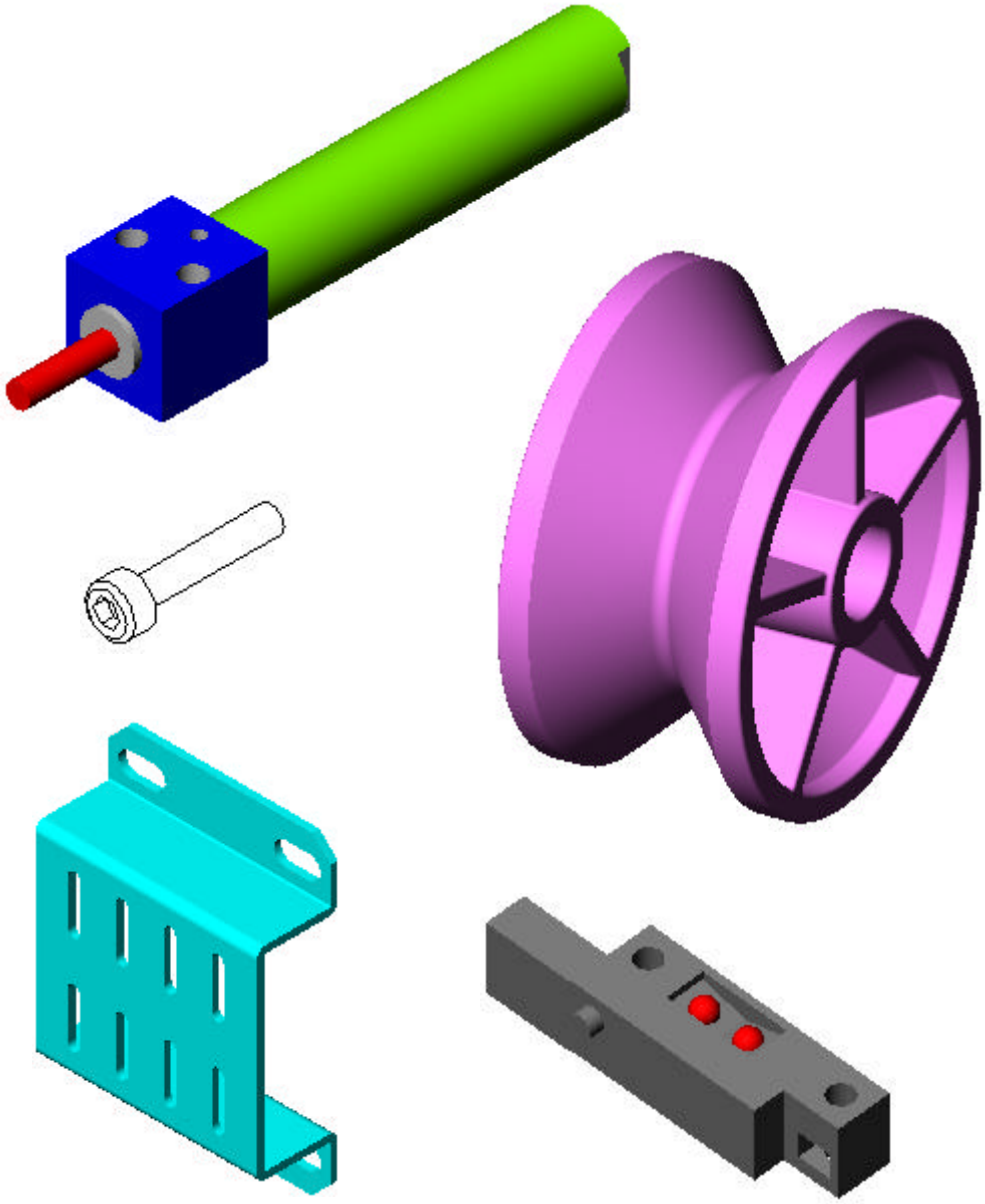

Choosing the best profile

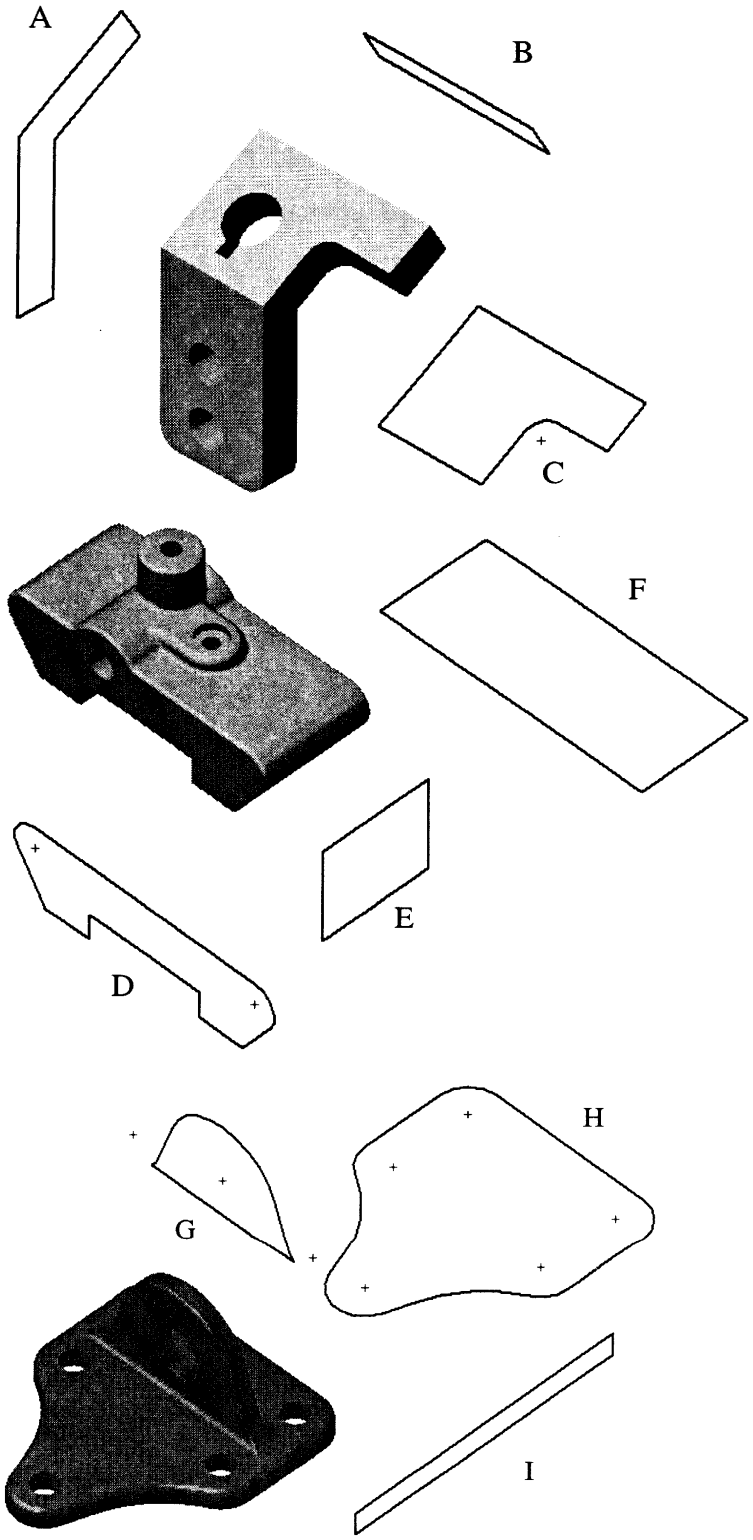

Answers:
A-Right
D-Front
H-Top

Starting the Sketch

How complex should sketches be?

In many cases, you can produce the same result by creating an extruded feature with a complex profile, or an extruded feature with a simpler profile and some additional features. (You often face this choice when planning the base feature for a part.)
For example, if the edges of an extrusion need to be rounded, you can draw a complex sketch that contains sketch fillets (A), or draw a simple sketch and add the fillets as separate features later (B)

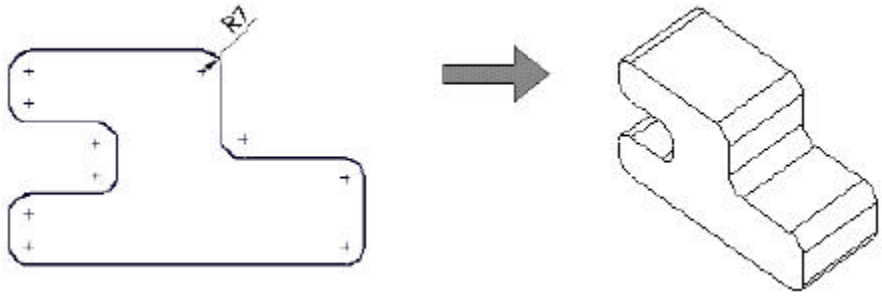

A **Complex sketch**

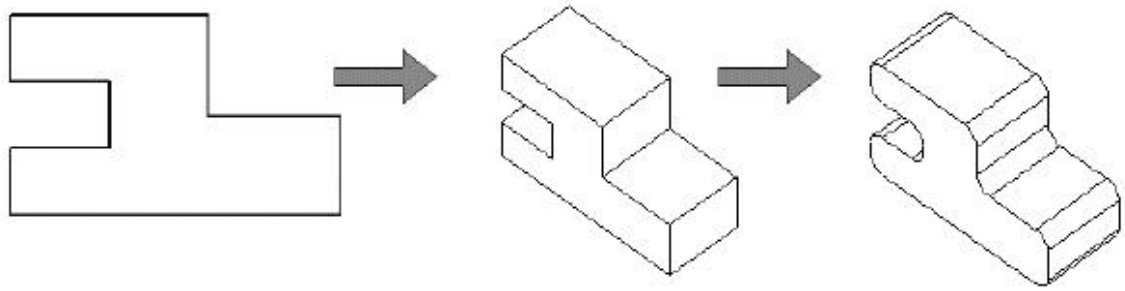

B **Simple sketch** Add fillet features

Here are some things to consider:

- Complex sketches rebuild faster. Sketch fillets can be recalculated much faster than fillet features, but complex sketches can be harder to create and edit.
- Simple sketches are more flexible and easier to manage. Individual features can be reordered and suppressed, if necessary.
- Selecting the correct work plane

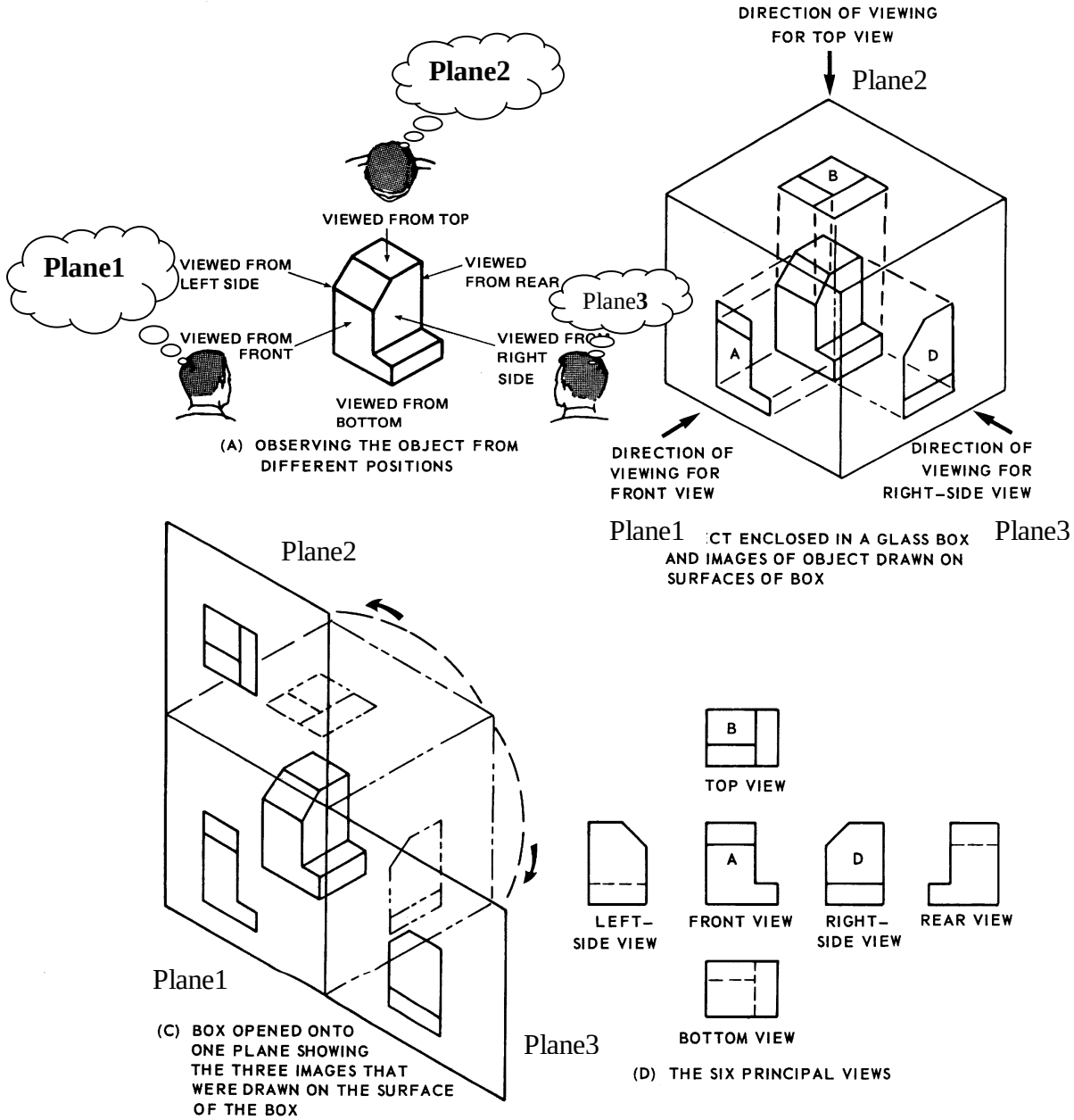

The SolidWorks default planes of the part correspond to the standard views as follows:

Plane1 - Front or Back

Plane2 - Top or Bottom

Plane3 - Right or Left

Does it matter where I start sketching?

When you create a new part or assembly, the three default planes are aligned with specific views. The plane you select for your first sketch determines the orientation of your part.
For example, if you choose ***Front** in the **View Orientation** dialog box (or add a front view to a drawing), the view is normal to **Front**.

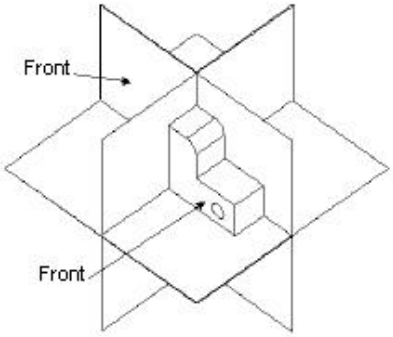

If you open a new part and start sketching *without* selecting a plane, the sketch is on **Front** by default and it is a *front* view.

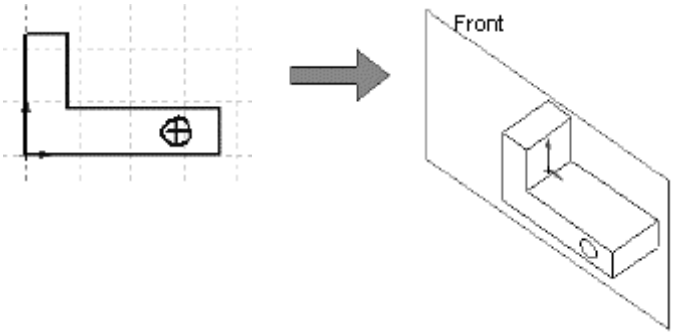

If your first sketch is a top view, you should select **Top** in the FeatureManager design tree *before* you click the **Sketch** tool.

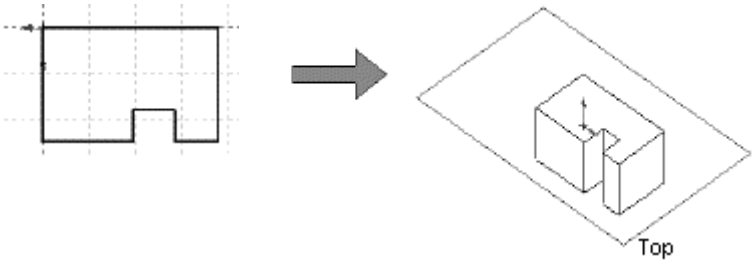

If your first sketch is a left or right view, select **Right**.

You do not have to use one of the default planes for your first sketch; you can create a new plane at any angle. The orientation of views is still determined by the default planes, however.

If you make a mistake or change your mind, you can reorient the part (to change "Front" to "Top" for example) with the **Update** button in the **View Orientation** dialog.

To change the orientation of the standard model views:

1. Click **View**, **Orientation** or press the **Space Bar**.
2. In the **Orientation** dialog, double-click on one of the named views to select the new orientation. For example, if you want what is currently the **Left** view to become the front view, double-click **Left**.
3. Click (do not double-click) the name of the standard view you want to assign to the current orientation of the model. For example, click **Front** if you want the current view to become the front.
4. Click **Update Standard Views**. This updates all of the standard views so they are relative to this view

Changing View Orientation

Orientation

Rotates and zooms the model or drawing to a preset view. You can select from the standard views (Normal To, Front, Back, Isometric, and so on for a model, Full Sheet for a drawing) or add your own named views to the list.

Viewing/Navigating the model

View Toolbar

The **View** toolbar controls your view of the model.

If any View icons are not included on your default View toolbar, you can customize the toolbar by adding any of the icons below

 View Orientation

 Previous View

 Zoom to Fit

 Zoom to Area

 Zoom In/Out

 Zoom to Selection

 Rotate View

 Pan

 Wireframe

 Hidden in Gray

 Hidden Lines Removed

 Fast HLR/HLG

 Display HLR Edges in Shaded Mode

 Shaded

 Section View

 Perspective

Design Intent

Features Effect Design Intent. The same shape below can be created with three distinct methods.

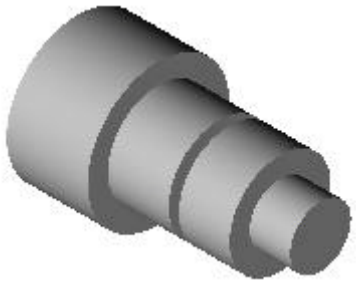

	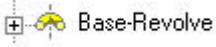	
"Layer Cake" Approach A stack of circular profiles extruded a short distance.	"Potter's Wheel" Approach One revolved feature	Manufacturing Approach Base feature as stock and a series of cuts.

The key is that no matter which method is used, the resulting part has the same volume and mass properties. The difference comes into play when changes are made.

Creating a fully constrained sketch

Automatic Relations

Specifies whether geometric relations are automatically created as you add sketch entities.

To turn automatic relation creation on as the system default:
Click Tools, Options, and select Sketch on the System Options tab. Select the Automatic relations check box.

To turn automatic relation creation on or off for the current document:
Click Tools, Sketch Tools, Automatic Relations. A check mark next to the menu item means that relations are created automatically as you sketch.

As you sketch, the pointer changes shape to show you which relations can be created. When Automatic Relations is turned on, the relations are added.

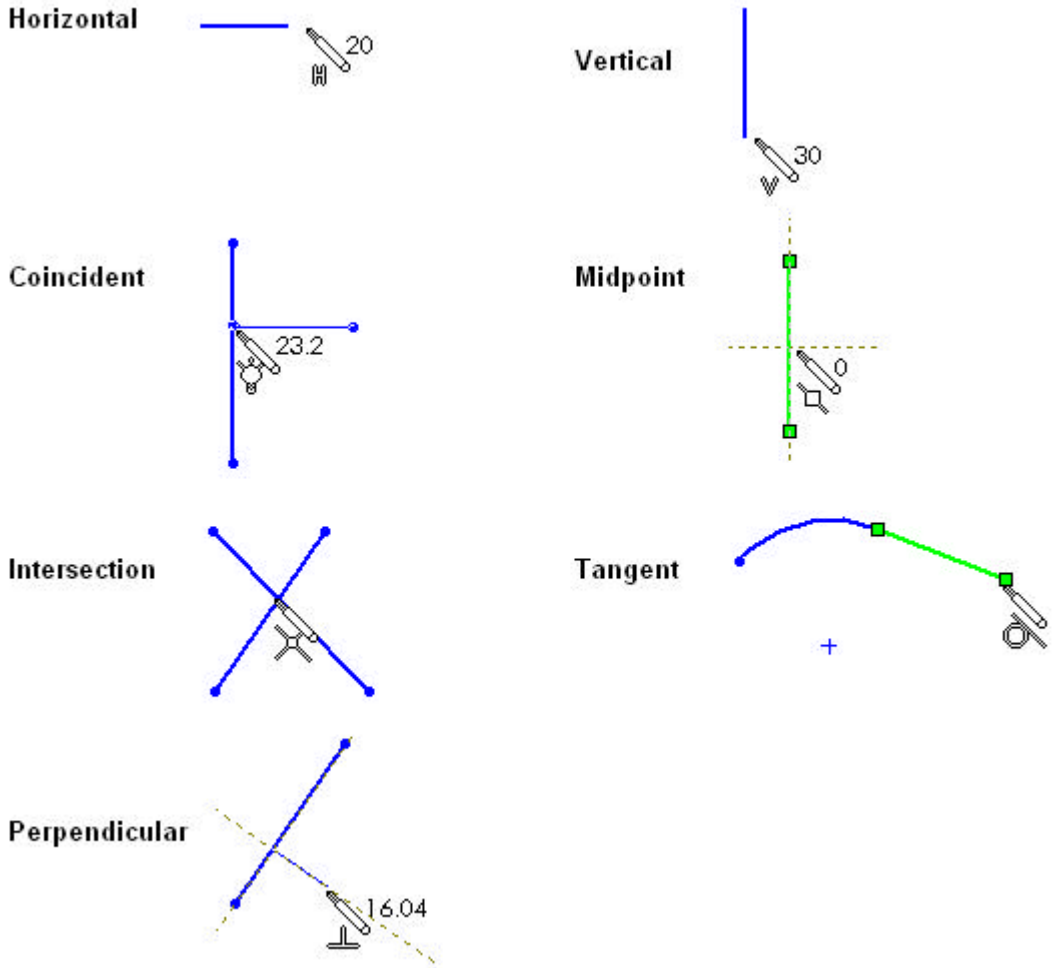

TIP: *Brown inference lines indicate that a relation is added automatically; blue inference lines indicate that no relation is added.*

Add Relations

Lets you create geometric relations (like tangent or perpendicular) between sketch entities, or between sketch entities and planes, axes, edges, or vertices.

These are the same relations that are created automatically as you sketch and by the **Mirror Sketch Entities** sketch tool.

The **Add Geometric Relations** dialog selects the best default relation based on the geometry selected, and indicates that selection with a dot in the middle of the radio button. Relations that already exist are marked with a darker (flat) radio button. Relations that are not appropriate are unavailable.

To remove a relation, use **Display/Delete Relations** .

To create a relation:

1. Click **Add Relation** on the Sketch Relations toolbar, or click **Tools**, **Relations**, **Add**.
2. In a sketch, select one or more items. For many relations you can select more than two.

   At least one of the items must be a sketch entity. The other items can be a sketch entity, an edge, face, vertex, origin, plane, axis, or sketch curve from another sketch that forms a line or arc when projected on the sketch plane.

   The items that you select are displayed in the **Selected Entities** box. To remove an item, click it again. To remove all items, right-click in the graphics area and select **Clear Selections**.
3. Select the relation you want to add, then click **Apply**.

To clear a relation:

Click **Undo** to remove the last relation you added.

To turn the Add Relations function on or off:

Click **Close**.

Add Geometric Relations Table

To add this relation...	Select...	Result:
Horizontal or Vertical	One or more lines or two or more points.	The lines become horizontal or vertical (as defined by the current sketch space). Points are aligned horizontally or vertically.
Collinear	Two or more lines.	The items lie on the same infinite line.
Coradial	Two or more arcs.	The items share the same centerpoint and radius.
Perpendicular	Two lines.	The two items are perpendicular to each other.
Parallel	Two or more lines.	The items are parallel to each other.
Tangent	An arc, ellipse, or spline, and a line, or arc.	The two items remain tangent.
Concentric	Two or more arcs, or a point and an arc.	The arcs share the same centerpoint.
Midpoint	A point and a line.	The point remains at the midpoint of the line.
Intersection	Two lines and one point.	The point remains at the intersection of the lines.
Coincident	A point and a line, arc, or ellipse.	The point lies on the line, arc, or ellipse.
Equal	Two or more lines, or two or more arcs.	The line lengths or radii remain equal.
Symmetric	A centerline and two points , lines, arcs, or ellipses.	The items remain equidistant from the centerline, on a line perpendicular to the centerline.
Fix	Any item.	The item's size and location are fixed. However, the end points of a fixed line are free to move along the infinite line that underlies it. Also, the endpoints of an arc or elliptical segment are free to move along the underlying full circle or ellipse.
Pierce	A sketch point and an axis, edge, line, or spline.	The sketch point is coincident to where the axis, edge, or curve pierces the sketch plane.
Merge Points	Two sketch points or endpoints.	The two points are merged into a single point.

NOTE: When you create a relation to a line, the relation is to the infinite line, not just the sketched line segment or the physical edge. As a result, some items may not physically touch when you expect them to.

Similarly, when you create a relation to an arc segment or elliptical segment, the relation is actually to the *full* circle or ellipse

Also, if you create a relation to an item that does not lie on the sketch plane, the resulting relation applies to the *projection* of that item as it appears on the sketch plane.

Mirror Sketch Entities

Creates copies of sketch entities which are mirrored around a centerline.
When you create mirrored entities, SolidWorks applies a symmetric relation between each corresponding pair of sketch points (the ends of mirrored lines, the centers of arcs, and so on). If you change a mirrored entity, its mirror image will also change.

To mirror existing items:

1. In a sketch, click **Centerline** on the Sketch Tools toolbar and draw a centerline.
2. Hold down the **Ctrl** key and select the centerline and the items you want to mirror.
3. Click **Mirror** on the Sketch Tools toolbar, or click **Tools**, **Sketch Tools**, **Mirror**.

To mirror items as you sketch them:

1. Select a centerline to mirror about.
2. Click **Mirror** on the Sketch Tools toolbar, or click **Tools**, **Sketch Tools**, **Mirror**. Symmetry symbols appear at both ends of the centerline to indicate that automatic mirroring is active.
3. Create the sketch entities that you want to mirror. The entities you sketch are mirrored automatically as you sketch them.

To turn mirroring off, click **Mirror** again.

Scan Equal

Scans a sketch for elements with equal lengths and/or radii, and provides a way to set an Equal relation between sketch elements that are the same length or radius.

To locate equal radii and line lengths:

1. In a sketch, click Scan Equal on the Sketch Tools toolbar, or click Tools, Relations, Scan Equal.

If sketch elements exist that are equal, the appropriate buttons are active. (For example, if two or more lines are equal, Length is active; if two or more arcs have equal radii, Radii is active; if an arc has a radii equal to a line length, Both is active.)

2. To see the equal sketch elements, click an active button.
   - The equal elements of the same type as the button that you clicked, are highlighted in the sketch.
   - The Value box displays the length or radii.
   - The Line Count or the Arc Count box displays the number of equal elements.
3. If there are additional sets of equal elements of the same type, the Find Next button is active. To highlight the additional sets, click the Find Next button.
4. Click Set Equal, if you want to create an Equal relation between the highlighted elements.
5. Click Close.

Dimensions Between Arcs or Circles

By default, distances are measured to the center of an arc or circle.

To change the way the distance is measured:

1. Right-click the dimension, and select **Properties**.
2. Set the **First arc condition** and **Second arc condition** as needed, then click **OK**.

   In these examples, the **First arc condition** is set to **Center**, and the **Second arc condition** is set as noted.

Center

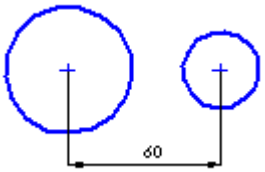

Min

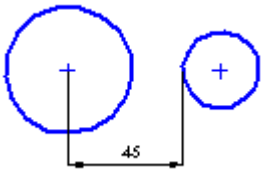

Max

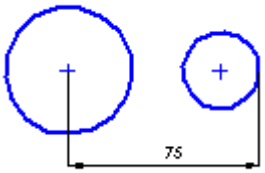

Example sketches

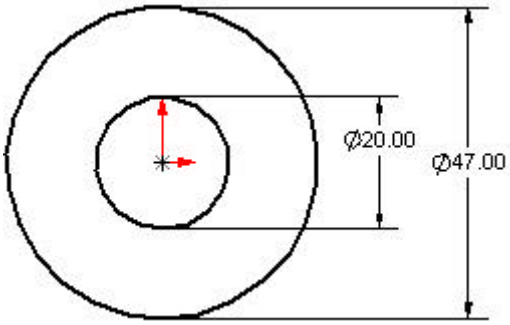

Roller

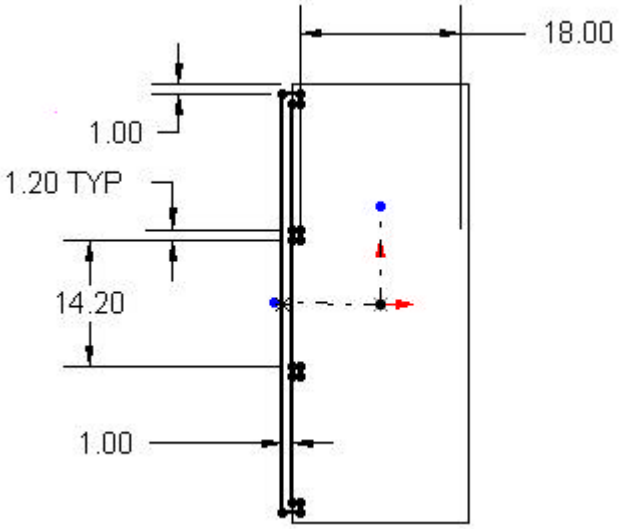

Pin

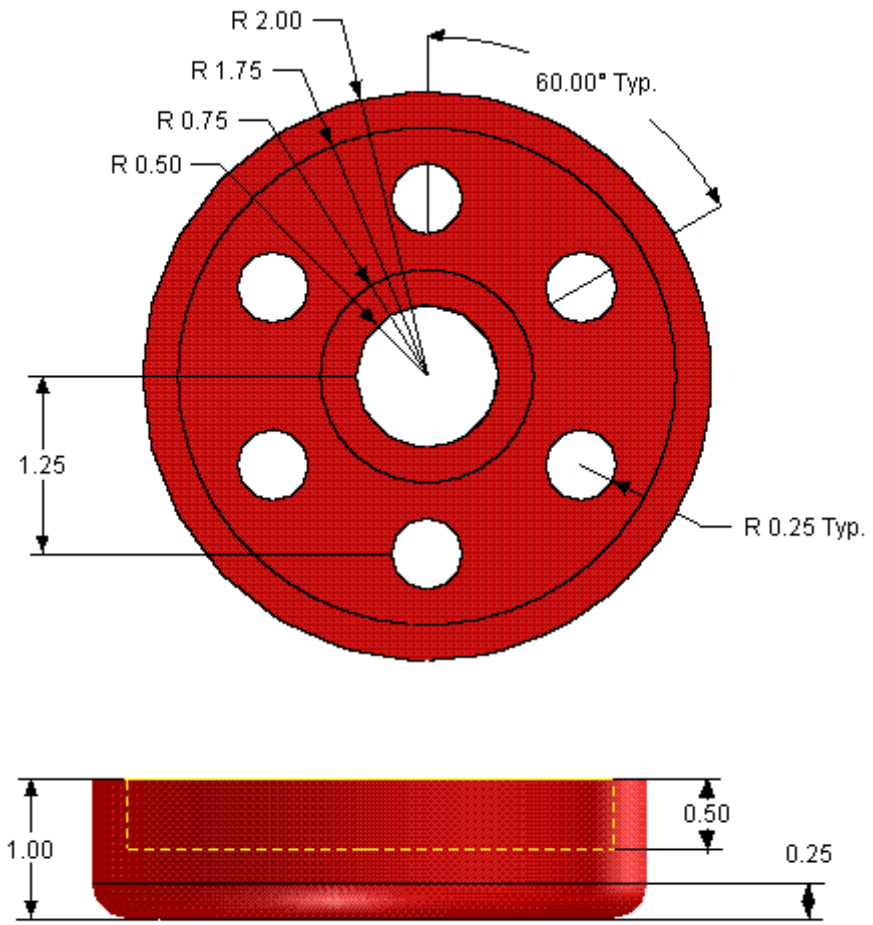

Wheel

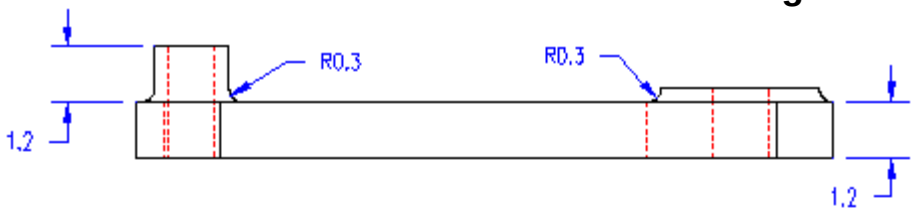

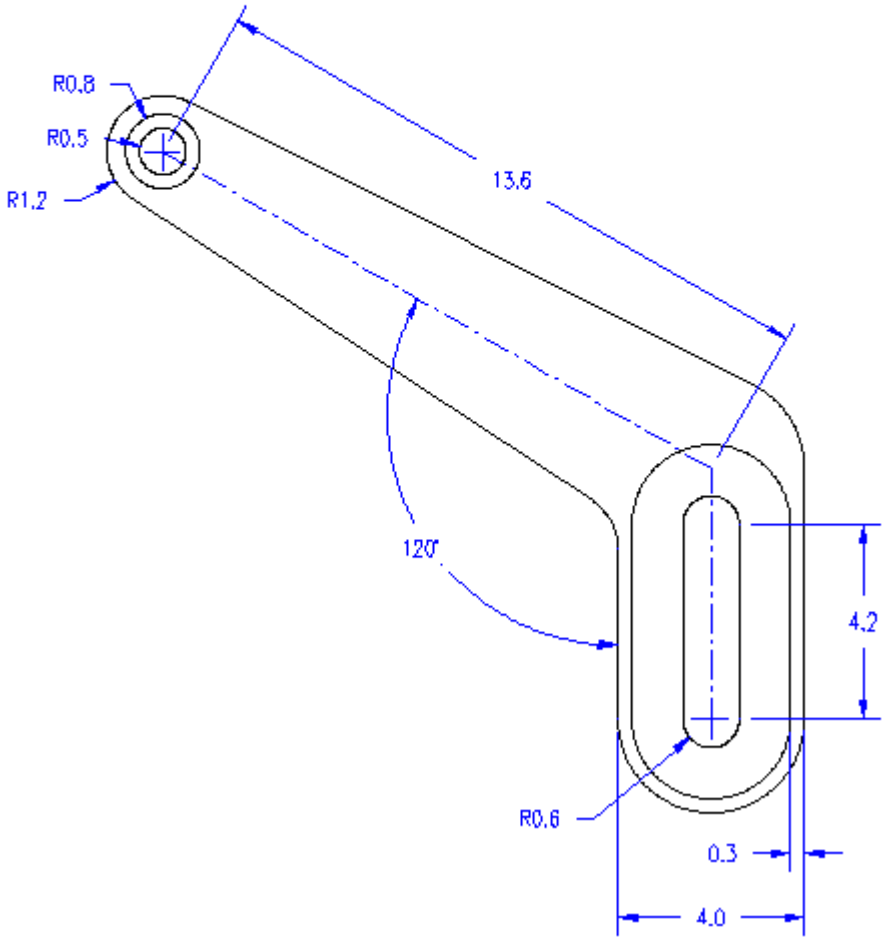

Arm

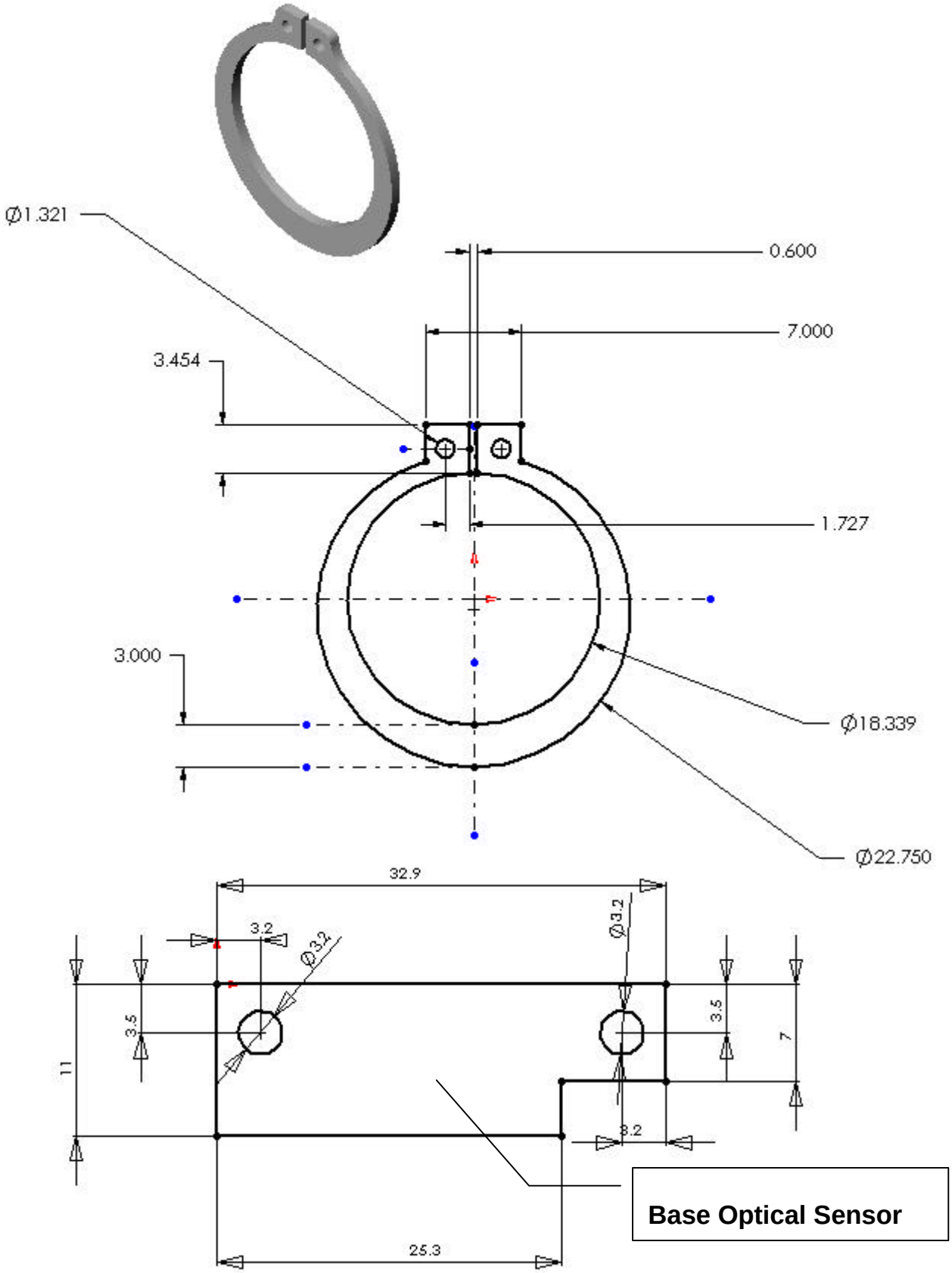
Ø1.321
0.600
7.000
3.454
1.727
3.000
Ø18.339
Ø22.750
32.9
3.2
Ø3.2
Ø3.2
3.5
3.5
7
11
3.2
25.3
Base Optical Sensor

Extrude Feature Overview

When you extrude a feature you specify an extrusion **type**. Depending on the type of extrusion you select, additional options are available. These include:

Type

- If you choose **Blind** or **Mid Plane**, you have to specify the **Depth**.
- If you choose **Offset From Surface**, you have to specify the **Offset**. Click **Reverse Offset**, if appropriate.

Depth

Depth specifies the depth of the extrusion.

Reverse Direction

Reverse Direction lets you extend the feature in the opposite direction from that shown in the preview in the graphics area.

Link to Thickness

Link to Thickness is used primarily for bosses on sheet metal parts. Selecting this option automatically links the depth of an extruded boss to the thickness of the base feature.

Flip Side

Flip Side to Cut appears only when you are extruding a cut. By default, material is removed from the inside of the profile. Selecting **Flip Side to Cut** removes all material from the outside of the profile.

Default cut

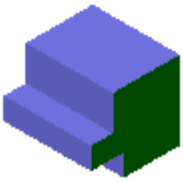

Flip side cut

NOTE: If you are using a closed profile for the cut and you select the **Flip Side to Cut** check box, you should select **Through All** as the type of end condition.

Draft

Draft While Extruding lets you add draft to a feature while you extrude it. If you select this option, you must set the draft **Angle**, and you can select **Draft Outward**, if needed.

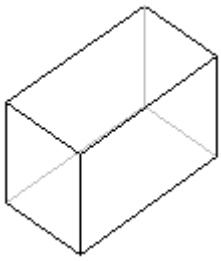

No draft

10° draft angle inward

10° draft angle outward

Selected Items

If the **Type** you specified relies on the selection of a surface or vertex, click that item in the graphics area. The selection is indicated in the **Selected Items** box.

Direction

- The feature is extruded in one direction from the sketch plane.
- **Both Directions** extrudes the feature in both directions from the sketch plane. Specify all the settings for the first direction (**Direction 1**), then select **Direction 2** from the **Settings for** box, and specify the settings for the second direction.

  NOTE: Observe the preview to verify the direction and depth of the feature.

Extrude As

- **Solid Feature** adds (or removes) solid volumes to the model.
- **Thin Feature** adds (or removes) thin-walled volumes to the model. A Thin Feature base can also be used as a basis for a sheet Metal part.

Boss Cuts

Practice exercise

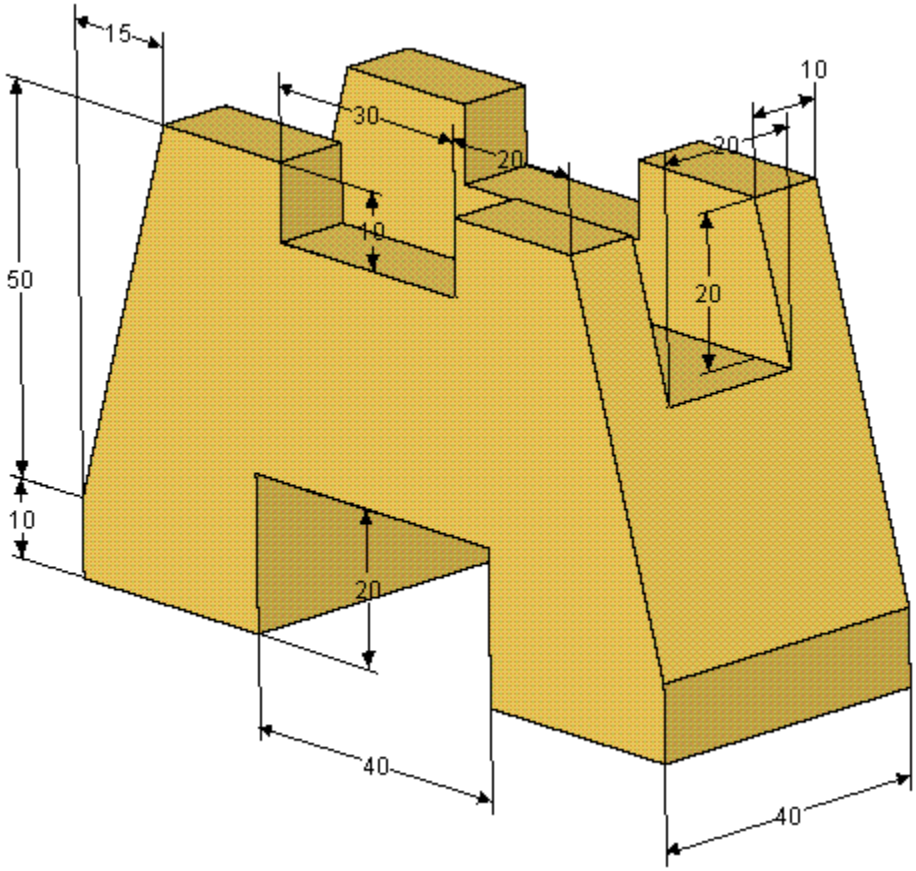

Revolve

Creates a feature that adds or removes material by revolving one or more profiles around a centerline. The feature may be either a solid, a thin wall, or a surface.

To create a revolved feature:

1 Create a sketch containing one or more profiles and a centerline.

- The sketch for a solid revolved feature can contain one or more closed, non-intersecting profiles. However, one profile must contain all of the other profiles for a base revolved feature containing multiple profiles.
- The sketch for a thin or surface revolved feature can contain only one open, or closed, non-intersecting profile.
- Profiles cannot cross the centerline. If the sketch contains more than one centerline, select the centerline you want to use as the axis of the revolution.

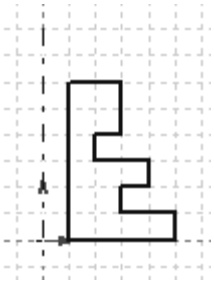

2 Click one of the following:

 or **Insert, Base, Revolve**, or **Insert, Boss, Revolve**

 or **Insert**, **Cut**, **Revolve**

Insert, Surface, Revolve

3 From the **Revolve As** box, select either **Solid Feature** or **Thin Feature** if creating a base, boss, or cut feature.

4 If creating a **Thin Feature**, click the **Thin Feature** tab, choose a direction from the **Type** box, and specify a **Wall Thickness**.

- or -

If creating a **Solid Feature**, choose a direction from the **Type** box and set the desired rotation angle in the **Angle** box.

5 The preview shows the direction of rotation. Select the **Reverse** check box if you want to rotate the feature in the opposite direction.

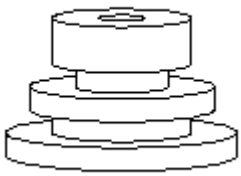

6 Click **OK**.

Adding Fillets

Recommendations for Fillets

In general, it is best to follow these rules when making fillets:

1. Add larger fillets before smaller ones. When several fillets converge at a vertex, create the larger fillets first.
2. Add drafts before fillets. If you are creating a molded or cast part with many filleted edges and drafted surfaces, in most cases you should add the draft features before the fillets.
3. Save cosmetic fillets for last. Try to add cosmetic fillets after most other geometry is in place. If you add them earlier, it takes longer to rebuild the part.
4. To enable a part to rebuild more rapidly, use a single Fillet operation to treat several edges that require equal radius fillets. Be aware, however, that when you change the radius of that fillet, all the fillets created in the same operation change.

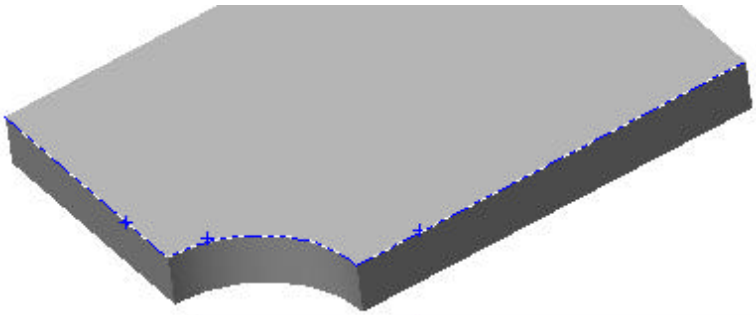

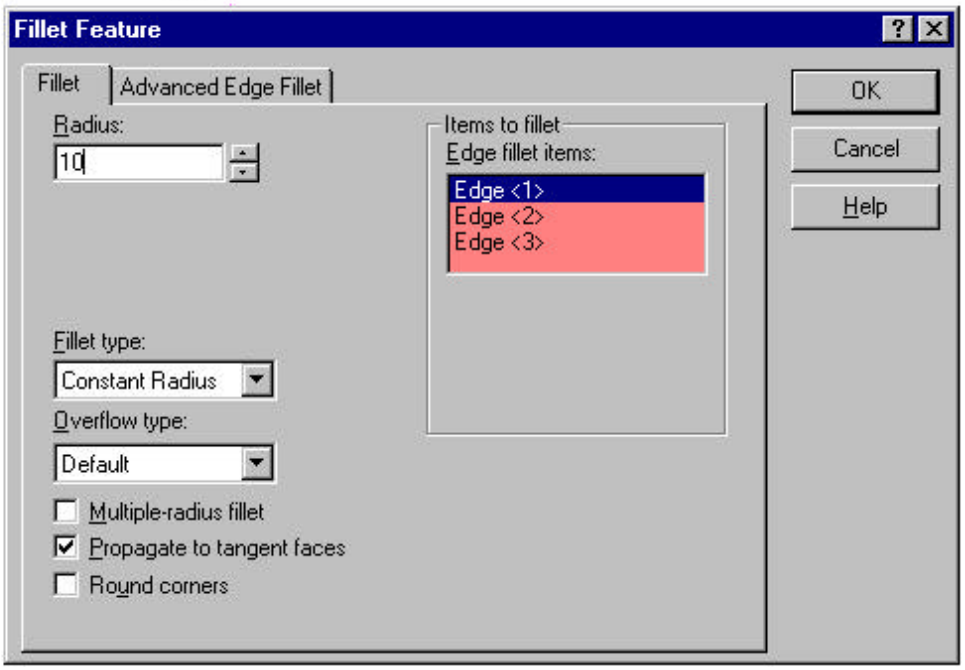

Color and Appearance of Parts

You can color the entire part, selected features (including surfaces or curves), or selected model faces. You can also modify color by manipulating the shaded appearance of the model.

To change the shaded appearance of a part:

1. Click Tools, Options, on the Document Properties tab, select Colors.
2. Under Model/Feature colors, select Shading.
3. To change the color, click Edit and a color from the Color palette or click Define Custom Colors.
4. Click OK to close the Color palette, and click OK to close the Document Properties – Colors dialog box.

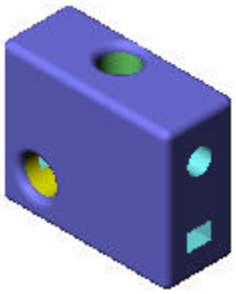

Note how the color is applied to the model, but features such as the cuts retain their individual shading. These can be applied before or after you apply a new color to the model.

To change the color of selected features or the entire part:

1. Select each feature from the FeatureManager design tree or from the graphics area (use Ctrl to select multiple features).
2. Click Edit Color  from the Standard toolbar, and select a color from the Edit Color palette or select a Custom color.
3. In Apply to and select either Face or Feature.
4. Click Apply to see a preview or click OK.

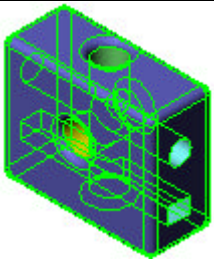 All features selected on the model	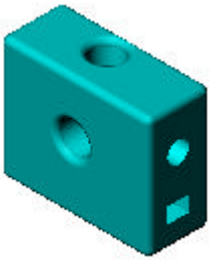 Color applied to all features	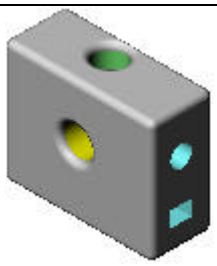 Color applied to selected features

You can also edit the properties that define the way the material reacts to light, and change material properties of the entire part or any of selected features.
See also curvature that allows you to apply and modify color to curved surfaces based on radius values.

Drag and Drop

The SolidWorks software supports several drag and drop operations for features.

- **Reordering features**. You can change the order in which features are rebuilt by dragging them in the FeatureManager design tree. Place the pointer on a feature name, press the left mouse button, and drag the feature name to a new position in the list. (As you drag up or down the tree, each item that you drag over highlights. The feature name that you are moving drops immediately below the currently highlighted item when you release the mouse button.)

  If the reorder operation is legal, a pointer appears; if it is not legal, a pointer appears.

Example:

The Cut-Extrude feature was made before the Shell feature was added.

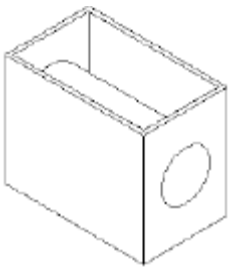

In the Feature Manager design tree, the Shell feature icon was dragged and dropped before Cut-Extrude icon.

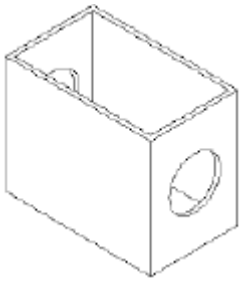

- **Moving and copying features**. You can move or copy features by dragging them in the model.

To move a feature to a new place on a model:

While holding down the **Shift** key, drag the feature to a different location. Release the mouse button to drop the feature on a planar face of the model.

Example:

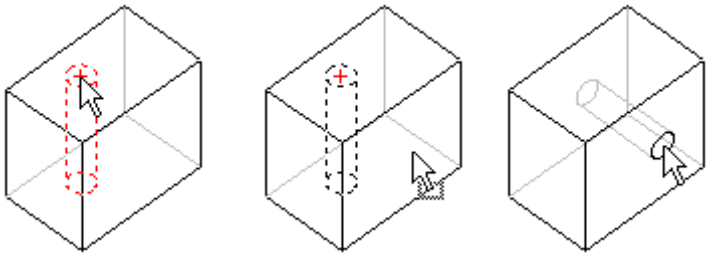

To move more than one feature at a time, hold down the **Ctrl** key as you select the features, then hold down the **Shift** key while you drag the features.

To create a copy of the feature:

Point at a planar face on the feature and hold down the **Ctrl** key while you drag the feature. Drop the copy on a planar face of the model.

To copy a feature from one part to another part:

Tile the windows, then hold down the **Shift** key, point at a planar face on the feature, then drag and drop the feature from one window to another.

- or -

You can also use the **Copy** and **Paste** tools on the Standard toolbar.

Using pallet Parts and Features

Adding a Palette Feature to a Part

Try using either **Hidden Lines Removed** or **Hidden in Gray** view mode, in order to see the preview and dimensions easily.

To add a palette feature to a part*:*

1 With a part open, click **Tools, Feature Palette**, and navigate to the folder that contains the feature.

2 Drag the feature from the Feature Palette window, observing the preview as you drag. Drop the feature in the general area of the face where you want the feature to be placed.

NOTE: You can also drag a hyperlink to a library feature part (**.sldlfp**) from Internet Explorer (4.0 or later) and drop it on the face of the part.

If you want to save the hyperlinked palette feature for future use, be sure to also drag a copy into the palette, or into an empty area of the SolidWorks window, then save it. Otherwise, no local copy of the document is saved.

Hyperlinked library feature parts have the same limitations and behaviors as library feature parts in the Feature Palette window.

The **Edit This Sketch** dialog box appears, and remains open while you position the sketch.

3 Click **Zoom to Selection** to get a closer view of the feature.

4 Click **Modify Sketch**, and move or rotate the sketch as needed.

If the feature has locating dimensions, they are left dangling, and are displayed in brown.

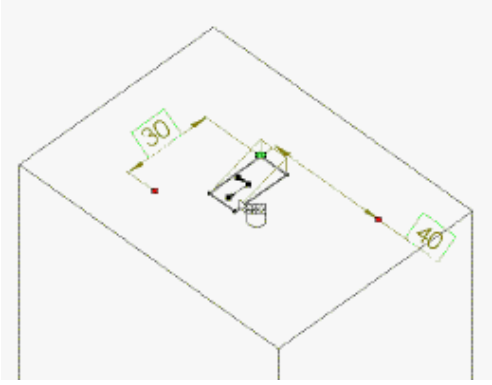

5 Re-attach the dangling dimensions. Select a dimension, then drag the red handle on the dimension line.

The pointer has the shape until it is over a suitable entity for re-attachment. When you release the handle over an edge or vertex, the dimension re-attaches and the handle turns green.

You can also add geometric relations to control the position of the sketch.

6 Adjust the values of the locating dimensions. (Double-click the dimension, change the value, and press **Enter**.) You can also adjust the locating dimensions in the next step, or later, by editing the appropriate sketch.

7 Click **Next** in the **Edit This Sketch** dialog box. The **Change Dimensions** dialog box appears.

The **Name** and **Value** of each available dimension is displayed. If the dimensions are named in the part where you created the library feature, those names are used. Otherwise, the default dimension names **D1** through **D*n*** are used.

Some dimensions of the feature may be unavailable, because they are specified as Internal dimensions

8 To display a feature dimension on the model, click either the **Name** or **Value**.

To modify a dimension, double-click the **Value,** and enter a new value. Click **Apply** to see the changes.

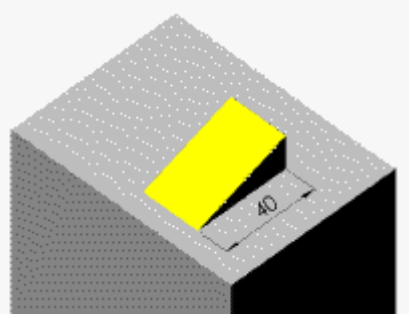

9 When you are satisfied with the dimension values, click **Finish**.

If the palette item consists of more than one feature, a library feature icon appears in the FeatureManager design tree. If the palette item consists of a single feature, the item is automatically dissolved, and the appropriate icon for the feature type appears in the FeatureManager design tree. In either case, the name of the feature is the name of the item in the Feature Palette window.

Adding a Library Feature to a Part

There are two ways to add a library feature to a part:

- Place the library feature in the Feature Palette (available for most, but not all types of features), then drag and drop the feature into the part..
- Use **Insert, Library Feature** (for those types of features that are not supported in the Feature Palette).

To add a library feature to a part:

1. With the target part open, click **Insert**, **Library Feature**. The **Insert Library Feature** dialog box appears.
2. Browse to the directory where the library feature is located, and select the library feature file (**.sldlfp**).
3. Click **Open.** Two windows and a dialog box appear, and tile automatically:

   •the library feature window

   •the target part window

   •the **Insert Library Feature** dialog box

   In the **Insert Library Feature** dialog, there is at least one **Mandatory** reference, and there may be **Optional** references also.

   •A **Mandatory** reference is preceded by an exclamation point !;

   •An **Optional** reference is preceded by a question mark ?. Dimensional references are optional references.
4. To locate the library feature on the target part, click a **Reference** entity (**Plane**, **Edge**, **Face**, or **Vertex**) that is listed as **Mandatory** on the target part. The exclamation point in the **Reference** list changes to a check mark ✓.

5. Select any optional references. As you click each item in the **Reference** list, notice that the corresponding entity is highlighted *in the library feature window.* Select the corresponding entity *in the target part window.*

   To deselect an entity, either double-click the check mark or click **Deselect All**.
6. Click **OK**.

The library feature is added to the target part.

Creating an Assembly

You can build complex assemblies consisting of many components. The components of an assembly can include both individual parts and other assemblies, called sub-assemblies. For most operations, the behavior of components is the same for both types.

Components are linked to the assembly file. Assembly documents have the .**sldasm** extension.

Adding Components to an Assembly

When you place a component (either an individual part or a sub-assembly) in an assembly, the component file is linked to the assembly file. The component appears in the assembly; the component data remains in the source component file. Any changes you make to the component file update the assembly.
There are many ways to add components to a new or existing assembly:

- Use the command on the Insert menu, then browse to locate the component.
- Drag and drop from an open document window.
- Drag and drop from Windows Explorer.
- Drag and drop a hyperlink from Internet Explorer.
- Drag and drop within the assembly for additional instances of existing components.
- Drag and drop from the Feature Palette window.

Mating Relationships

Mating relationships let you precisely position the components with respect to each other in an assembly. They let you define how the components move and rotate with respect to other components. By adding mating relationships successively, you can move the components into the desired positions.

Mating creates geometric relationships, such as coincident, perpendicular, tangent, and so on. Each mating relationship is valid for specific combinations of geometry. The following table shows the mating relationships that are supported between the various types of geometry:

	Plane	**Cylinder**	**Line**	**Cone**	**Point**	**Sphere**
Plane (planar face or plane)	coincident perpendicular parallel distance angle					
Cylinder (cylindrical face)	tangent	concentric tangent				
Line (linear edge, axis, or sketch line)	coincident perpendicular parallel distance	coincident concentric tangent	coincident perpendicular parallel distance angle			
Cone (conical face)	---	concentric	concentric	coincident concentric distance		
Point (origin, vertex, or sketch point)	coincident distance	coincident concentric	coincident distance	concentric	coincident distance	
Sphere (spherical face)	distance tangent	concentric tangent	concentric distance	tangent	concentric distance	concentric distance tangent

Alignment Condition

You can specify an alignment condition for the mating relations. The conditions are:

- Aligned: places the components so that the normal vectors for the selected faces point in the same direction.
- Anti-Aligned (On): places the components so that the normal vectors for the selected faces point in opposite directions.
- Closest: places the components either aligned or anti-aligned, depending on which condition can be satisfied with the least movement.

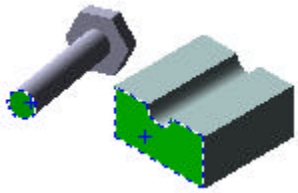

These examples show the effect of changing the alignment condition for Coincident and Distance mates, and flipping the direction of a Distance mate.

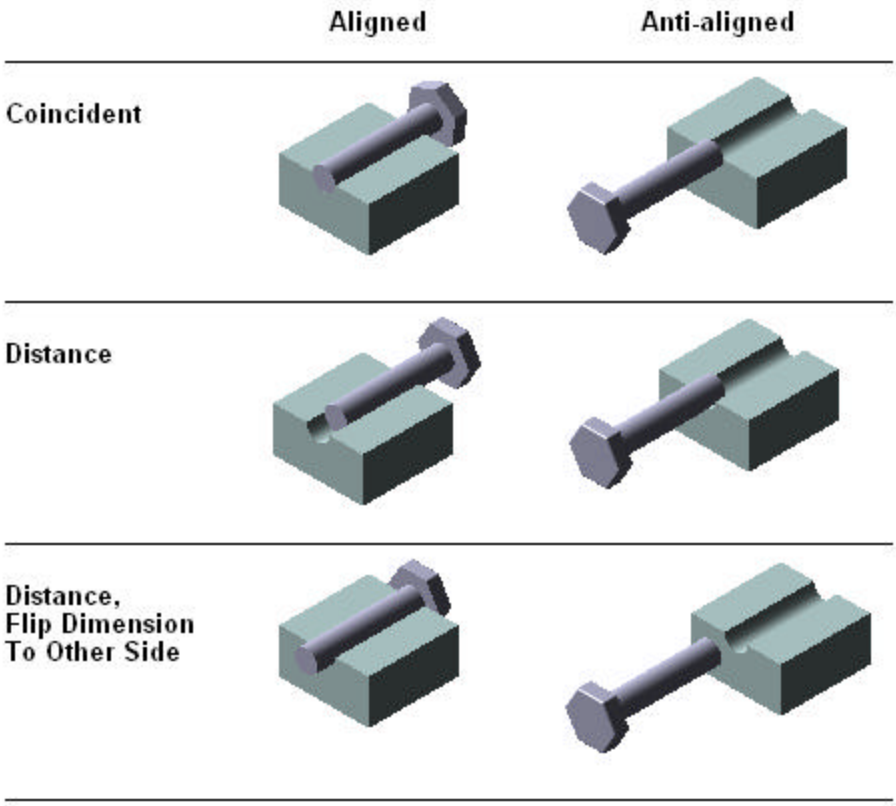

Measure

Measures distance, angle, radius, and size of and between lines, points, surfaces, and planes in sketches, 3D models, assemblies, or drawings. When you measure the distance between two points, the delta x, y, and z distances are also displayed. When you select a vertex or sketch point, the x, y, and z coordinates are displayed.

To use the measure tool:

1. Click Measure on the Tools toolbar or Tools, Measure.
   The Measure dialog box appears.
2. To keep the dialog box in place while you are working, click the push pin icon.

NOTE: While the Measure dialog is in place, you can switch between different documents without closing the dialog. The name of the currently active document displays near the top of the Measure dialog box. If you activate a document that has items already selected, the measurement information updates automatically.

3. In the Projection on region, click Screen to measure the projection on the screen, or click Plane/Face to measure the projection on a selected plane or planar face.
4. Select the items to measure.

The selected items appear in the Selected items list, and appropriate values are displayed in the Measurements box. New measurements update dynamically when you change selections.

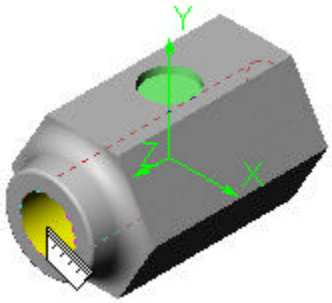	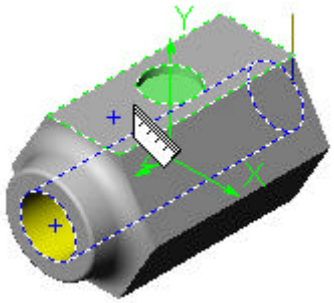
If you select a single entity, the size of the entity (the length of an edge, the area of a face, and so on) is displayed in the Measurements box	If you select a feature, all the dimensions that pertain to the feature are displayed in the Measurements box.

If the combination of selected entities does not make sense for the measure function, the Measurements box is blank.

5. To delete an item from the Selected items list, click the item's name in the list and press the Delete key, or click the selected item again in the graphics area.
6. To clear all items from the Selected items list, right-click in the graphics area, and select Clear Selections.
7. To display the results based on a coordinate system that you defined, select the name from the Output coordinate system list.
8. To display the results in scientific notation or using different measurement units than the units specified for the active document, click Options to display the Measurement Options dialog box. To change other material properties, click Tools, Options, on the Document Properties tab, select Material Properties.
9. To temporarily turn off the measure function, right-click in the graphics area, and choose Select from the menu. To turn the measure function back on, click inside the Measure dialog box.
10. Click Close to close the dialog box.

Creating a drawing

Drawings consist of one or more views generated from a part or assembly. The part or assembly associated with the drawing must be saved before you can create the drawing.

New! Drawing files have the **.slddrw** extension. A new drawing takes the name of the first model inserted. The name appears in the title bar. When you save the drawing, the name of the model appears in the **Save As** dialog box as the default file name, with the default extension **.slddrw**. You can edit the name before saving the drawing.

To create a new drawing:

1. Click **New** on the Standard toolbar, or click **File**, **New**.

   The **New SolidWorks Document** dialog box appears.
2. Select the **Drawing** icon on the **Templates** tab.

   The **Create RapidDraft Drawing** check box appears. Select this check box if you wish.
3. Click **OK**.
4. In the **Sheet Format To Use** dialog box, select a sheet format:
   - **Standard Sheet Format.** Select a standard sheet size sheet format (for example, **A-Landscape**) from the list.
   - **Custom Sheet Format.** Click **Browse,** navigate to a custom sheet format on your system or the network, and click **Open**.
   - **No Sheet Format**. Select a blank, standard sheet from the **Paper Size** list, or select **User Defined**. If you select **User Defined**, you must specify the paper size (**Width** and **Height**).
5. Click **OK**.

   A new drawing document opens, using the selected sheet format, and the current sheet scale is displayed in the status bar at the bottom of the SolidWorks window.

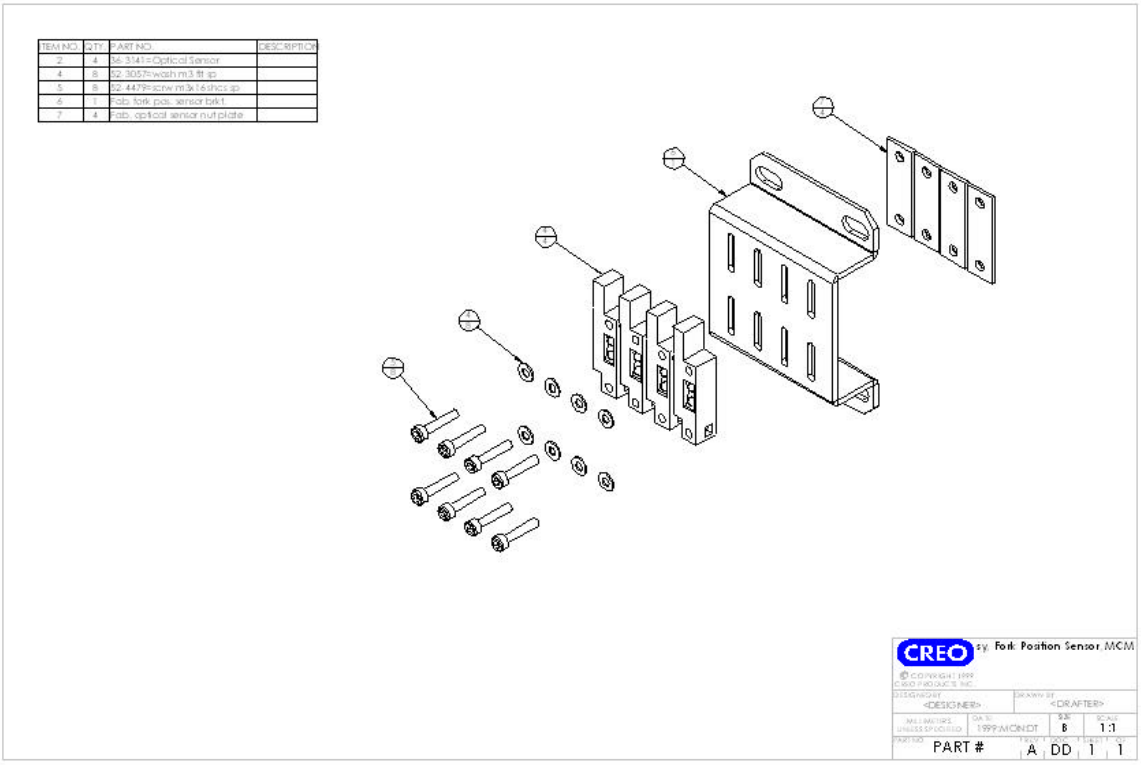

CreoScitex naming conventions

PART NO.

The part number references and follows the standard CREO part numbering strategy according to document # 72-0003A - PART NUMBERING AND DATA DESCRIPTION RULES.The PART NO. uses the first 3 fields under these rules, in the form of:

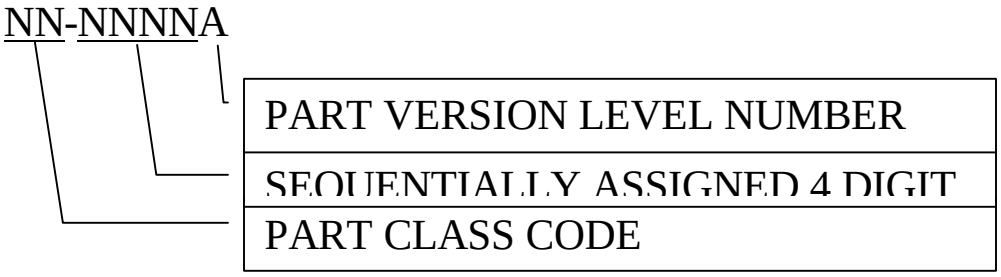

REV

Indicates the latest revision letter used on this drawing. The letter used here must match the latest letter in the Revision block.

DOC

Indicates the type of document. The default value for this field is DD - Detailed Drawing. Available options are: Engineering / Production Drawings.

AD	Assembly Drawing
AR	Artwork
BD	Block Diagram
CD	Casting Drawing
DD	Design Drawing
IL	Illustration (manuals, etc.)
MD	Model Drawing
PD	Pictorial Drawing
SD	Schematic Diagram
TD	Timing
WD	Wiring Diagram

Interference Volumes

In a complex assembly, it may be difficult to visually determine whether components interfere with each other. You can determine the interference between components and examine the resulting interference volumes.

To check for interference between components in an assembly:

1. Click **Tools, Interference Detection**.
2. Select two or more components in the assembly, or click an assembly icon (top-level or sub-assembly) in the FeatureManager design tree. If you click the top-level assembly, all the components in the assembly are checked for interference.
3. Click the **Treat coincidence as interference** check box if you want coincident entities (faces, edges, or vertices that touch or overlap) to be reported as interferences. Otherwise, touching or overlapping entities are ignored.

4. Click **Check.**

*If there is interference, the **Interference results** box lists the interference occurrences (one occurrence is reported for each pair of interfering components). When you click an item in the list, the related interference volume is highlighted in the graphics area, and the names of the components involved are listed.*
The volume of the interference is reported in the form of length, width, and height of the bounding box around the area of interference. These numbers are displayed in the graphics area.

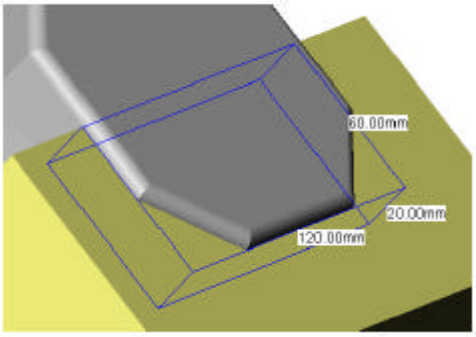

5. With the dialog box still open, you can select other components to check for interference. Right-click in the graphics area and select **Clear Selections**, then select new components for checking, and click **Check**.
6. Click **Close** to dismiss the dialog box. When the dialog box is dismissed, the interference volumes are dismissed also.

TIP: If detecting interference is important in your design work, check for interference each time you move or rotate a component.

Mirror All

To create a part that is symmetrical about a planar face, you can use **Mirror All**. You build one half of the part, then mirror the entire model. Any changes you make to the original half are reflected in the mirrored half.

To mirror a part around a planar face:

1. Establish a plane corresponding to the plane of symmetry of the complete part. This can be an existing plane or one you create.
2. Create the features for one half of the part on one side of this plane.
3. Click **Insert, Pattern/Mirror, Mirror All**.
4. Select the face of the part half on the plane of symmetry.

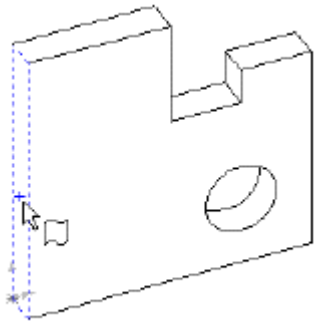

The name of the face appears in the **Mirror Plane** box.

5. Click **OK**.

A mirror image of the original part half is joined to the part at the selected face to make a complete, symmetrical part.

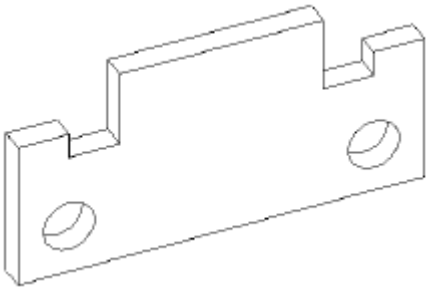

Fixing the Position of a Component

You can fix the position of a component so that it cannot move with respect to the assembly origin. By default, the first part in an assembly is fixed; however, you can unfix it at any time.

It is recommended that at least one assembly component is either fixed, or mated to the assembly planes or origin. This gives a frame of reference for all other mates, and helps prevent unexpected movement of components when mates are added.

- A fixed component has a **(f)** before its name in the FeatureManager design tree.
- A floating component has a **(-)** before its name in the FeatureManager design tree.
- A fully defined component does not have a prefix.

To fix or float an assembly component:

1. Right-click the component in the graphics area or the component's name in the FeatureManager design tree.
2. Select **Fix** or **Float** from the menu, depending on how you want the component to behave.

FeatureManager design tree conventions

In the FeatureManager design tree, any item with an external reference has a suffix that indicates the status of the reference:

- The suffix **->** means that the reference is in-context. It is solved and up-to-date.
- The suffix **->?** means that the reference is out-of-context. The feature is not solved or not up-to-date. To solve and update the feature, open the assembly that contains the update path.
- The suffix **->*** means that the reference is locked.
- The suffix **->x** means that the reference is broken.

Locking and Breaking External References

New! You can lock, unlock, or break the external references of an assembly component.

When you *lock* the external references on a component, the existing references no longer update and you cannot add any new references to that component.

Once you *unlock* the external references, you can add new references or edit the existing references.

When you *break* the external references, the existing external references no longer update and you can add new references to the component.

To lock, unlock, or break the external references:

1. Right-click the feature with the external references in the FeatureManager design tree and select **List External Refs**.

   The **External References For** dialog box appears.
2. Click **Lock All** to lock all of the external references for this feature.

   The suffix for the component changes from **->** to **->***.
3. Click **Unlock All** to unlock the references for this feature.

   The suffix for the component changes back to **->**.
4. Click **Break All** to permanently break the external references for this feature.

   The suffix for the component changes to **->x**.

   To list the broken references in the **External References For** dialog box, click the **List Broken References** check box.
5. Click **OK** to close the dialog box.

3D Modeling tips.

- Always look/start with the a simplified base feature base feature.
- Plan the Model view (Top, Front, Right)
- Plan the Model origin
- Plan the steps required to achieve the finished part working from a crude to refined part.
- Where possible leave fillets and chamfers until last.
- Color each part (an significant surfaces where required) – gray parts do not stand out in an assembly.

Hole Wizard Overview

New! The Hole Wizard includes a redesigned user interface that includes the following capabilities:

Dynamic Updating

Capabilities, available selections, and graphic previews update based on which hole type you select. After you select a hole type, you determine the appropriate fastener. The fastener you select dynamically updates the appropriate parameters. The interface uses a two column property and value format, along with an overall graphic preview based on end condition and depth.

In addition to the dynamic graphic preview based on end condition and depth, graphics in the **Value** column show specific details, as they apply to the type of hole you select.

Increased Capabilities

A reorganized dialog box includes easier navigation with enhanced functionality. New functionality includes tabs for the following hole types:

- **Counterbore**
- **Countersink**
- **Hole**
- **Tap**
- **Pipe Tap**
- **Legacy**

Favorite Name

For each hole type (except **Legacy**), you can create, save, update or delete hole types to include your **favorite properties** values. This allows you to quickly apply any saved hole types to a SolidWorks document.

TIP: Remember that you can only create a hole on a planar surface. To create a hole on a curved surface, you need to create a small planar surface between the adjacent curved faces.

To access hole wizard:

1. Create a part and select a planar surface.
2. Click **Hole Wizard** on the Features toolbar or **Insert, Features, Hole, Wizard**.
3. Click the appropriate tab in the **Hole Definition** dialog box.

Counterbore

When you select the **Counterbore** tab in the **Hole Definition** dialog box, all the information in the **Property** and **Value** columns update to retrieve only information that applies to this hole type. The preview also updates, depending on your selections.

To access hole wizard and use counterbore type:

1. Create a part and select a planar surface.
2. Click **Hole Wizard** on the Features toolbar or **Insert, Features, Hole, Wizard**.
3. Click the **Counterbore** tab in the **Hole Definition** dialog box.

To create a counterbore hole:

1. Determine what *type of fastener* you need. For each of the following items in the **Property** column, select the corresponding item from the **Value** column.
   - **Standard**, select for example ANSI Metric or JIS.
   - **Screw type**, select for example Button or Hex Screw.
   - **Size**, select a size for your fastener.

   The **Description** updates.

   NOTE: Once you have selected a type of fastener, the Hole Wizard updates items in the **Value** column.

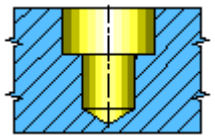

Preview with the **Counterbore** tab

2. Determine the following parameters for the hole you want to create on your part.
   - **End Condition & Depth**, select an **end condition** from the list and enter a depth. Note how the preview for the end condition updates and items in the **Value** column change appropriately.
   - **Hole Fit & Diameter**, select a fit and enter a diameter. Note that when you change the hole fit, the *value* updates, increasing or decreasing as appropriate.

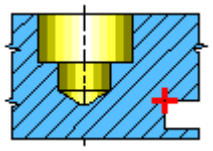

Preview of **Up to Vertex**

Example of **dynamic counterbore values**

3. Determine which (if any) of the remaining parameters you need to change.
   Enter the values, using the illustrations as a guide to what each item in the **Property** column represents.
4. To save these settings and use them for future holes, save as a **favorite**.
5. Click **Next** to **position** the hole on your model.

Countersink

When you select the **Countersink** tab in the **Hole Definition** dialog box, all the information in the **Property** and **Value** columns update to retrieve only information that applies to this hole type. The preview also updates, depending on your selections.

To access hole wizard and use countersink type:

1. Create a part and select a planar surface.
2. Click **Hole Wizard** on the Features toolbar or **Insert, Features, Hole, Wizard**.
3. Click the **Countersink** tab in the **Hole Definition** dialog box.

To create a countersink hole:

1. Determine what *type of fastener* you need. For each of the following items in the **Property** column, select the corresponding item from the **Value** column.
   - **Standard**, select for example ANSI Metric or BSI.
   - **Screw type**, select for example Flat Head or Oval Head.
   - **Size**, select a size for your fastener.

   The **Description** updates.

   NOTE: Once you have selected a type of fastener, the Hole Wizard updates items in the **Value** column.

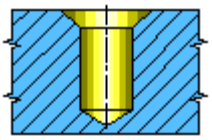

Preview with the **Countersink** tab

2. Determine the following parameters for the hole you want to create on your part.
   - **End Condition & Depth**, select an **end condition** from the list and enter a depth. Note how the preview for the end condition updates and items in the **Value** column, change appropriately.
   - **Hole Fit & Diameter**, select a fit and enter a diameter. Note that when you change the hole fit, the *value* updates, increasing or decreasing as appropriate.

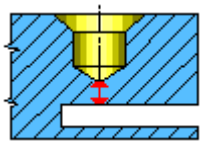

Preview of **Offset From Surface**

Example of **dynamic countersink values**

3. Determine which (if any) of the remaining parameters you need to change.
   Enter the values, using the illustrations as a guide to what each item in the **Property** column represents.
4. To save these settings and use them for future holes, save as a **favorite**.
5. Click **Next** to **position** the hole on your model.

Notes: